iW TRANSLATOR

INSTALLATION GUIDE

Color Kinetics Incorporated
10 Milk Street, suite 1100
Boston, MA 02108
Tel 888 Full RGB
Tel 617 423 9999
Fax 617 423 9998
info@colorkinetics.com
www.colorkinetics.com

ITEM# 104-000013-00

FOR USE UNDER U.S. PATENTS 6,016,038, 6,150,774, 6,340,868, AND 6,788,011. OTHER PATENTS PENDING.

DESIGNED AND DEVELOPED IN THE USA.

©2005 Color Kinetics Incorporated. All rights reserved. Chromacore, Chromasic, Color Kinetics, the Color Kinetics logo, ColorBlast, ColorBlaze, ColorBurst, ColorCast, ColorPlay, ColorScape, Direct Light, iColor, iColor Cove, iPlayer, Optibin, QuickPlay, Sauce, the Sauce logo, and Smartjuice are registered trademarks and DIMand, IntelliWhite, Powercore, and Video With Light are trademarks of Color Kinetics Incorporated.

All other brand or product names are trademarks or registered trademarks of their respective owners.

PUB-000139-00R00

INTRODUCTION

The Color Kinetics® iW Translator is a hardware device that functions as both a translator and an expander.

- In translator mode, it allows interoperability between 3rd party architectural control systems and Color Kinetics IntelliWhite™ fixtures and IntelliWhite Series power/data supplies.
- In expander mode, it can serve as a hub to connect up to two iW Scene Controller keypads to a single Color Kinetics IntelliWhite™ power/data supply. iW Translator can also serve as a relay for installations requiring more than 50 feet of cabling between the iW Scene Controller keypad and the iW power/data supply.

Included in this box:

- iW Translator
- 10 foot data cable (4-pin)
- Registration and Warranty Card
- Installation Guide

Scope of this User Guide

The goal of this user guide is to explain the functionality of iW Translator. It describes how to connect and use iW Translator. This document is for reference only and should never be considered a substitute for any provisions of a regulation or state and/or local code.

Identification and Warnings of Safety Hazards

In accordance with ANSI Z535.4 the following system of identifying the severity of the hazards associated with the products is used:

"**DANGER**" Imminently hazardous situation which, if not avoided, will result in death or serious injury.

"**WARNING**" Potentially hazardous situation that, if not avoided, could result in death or serious injury.

"**CAUTION**" Potentially hazardous situation that, if not avoided, may result in minor or moderate injury or property damage.

WARNING: Ensure that main power supply is off before installing, wiring, or servicing iW Translator. Failure to adhere to these instructions can result in death or serious injury.

WARNING: iW Translator must be installed by a qualified professional in accordance with NEC and relevant local codes. Failure to comply can result in death, serious injury, or property damage.

WARNING: Do not attempt to install or use iW Translator until you read and understand the installation instructions and safety labels. Failure to adhere to these instructions could result in serious injury or property damage.

NOTE: The instructions and precautions set forth in this user guide are not necessarily all-inclusive, all conceivable, or relevant to all applications as Color Kinetics cannot anticipate all conceivable or unique situations.

Owner/User Responsibilities

It is the responsibility of the contractor, installer, purchaser, owner, and user to install, maintain, and operate iW Translator in such a manner as to comply with all state and local laws, ordinances, regulations, and the American National Standard Institute Safety Code.

Connection Considerations

- Compatibility: iW Translator can be used with Color Kinetics iW power/data supplies including iW PDS-150, iW PDS-60, and iW Data Enabler.
- When iW Translator is connected to a 3rd party controller, no external power supply is required.
- When one or more iW Scene Controller keypads are connected, an external power supply is required. This optional 9-24VDC, 100mA power supply (109-00024-00) is sold separately.

TRANSLATOR MODE

When iW Translator is in translator mode, it allows you to connect certain 3rd party architectural controllers (such as Lutron Homeworks Interactive System, and Vantage Automation System) to Color Kinetics iW power/data supplies.

For detailed instructions on interfacing iW Translator with 3rd party architectural controllers, see the Application notes on the web.

Connecting as a Translator

Connect iW Translator as a translator as shown in Fig. 1.

Fig. 1

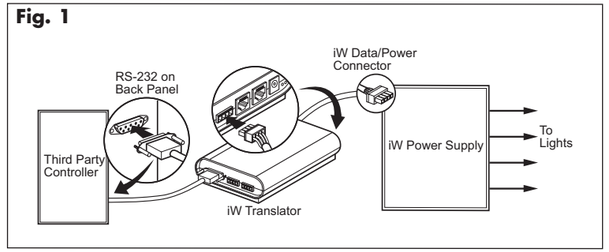

1. Connect the 3rd party controller to iW Translator by attaching an RS232 cable to the DB9 connector on the front of iW Translator and the RS-232 connector on the 3rd party controller.
2. Connect iW Translator to the Color Kinetics iW power/data supply by attaching the data cable from the iW Data/Power connector (4-pin) on the back of iW Translator to the iW Data/Power connector (4-pin) on the iW data/power supply.

Note: A DC Power Supply is not needed in this mode, as power is provided through the iW data/power supply connection.

3. Connect the lights to the Color Kinetics iW power/data supply.

Note: Refer to the Application notes on the web for detailed instructions on interfacing iW Translator with 3rd party controllers.

EXPANDER MODE

When iW Translator is in expander mode, it allows you to expand your system in two ways.

First it allows you to connect two iW Scene Controllers to a single Color Kinetics iW power/data supply.

Second, it allows you to connect multiple iW Scene Controllers to the Color Kinetics iW power/data supply (by daisy chaining the iW Translators). Using this configuration, you can increase the distance between the iW Controller and the Color Kinetics iW power/data supply to 500 feet.

Connecting as an Expander (with Two iW Scene Controllers)

Connect iW Translator to two iW Scene Controllers as shown in Fig. 2.

Fig. 2

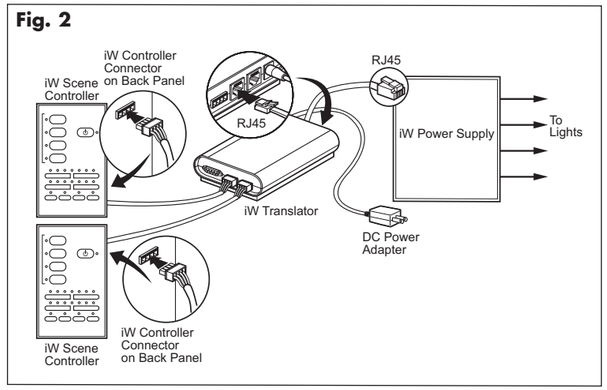

1. Connect each of the two iW Scene Controllers to iW Translator by attaching the cables from the iW Controller connectors (4-pin) on the back panel of the iW Scene Controllers to iW Controller connectors (4-pin) on the front of the iW Translator. Refer to the iW Scene Controller Installation Guide for information on using the iW Scene Controllers.
2. Connect iW Translator to the Color Kinetics iW power/data supply by attaching the data cable from the RJ45 connector on the back of the iW Translator to the RJ45 connector on the Color Kinetics iW power/data supply.
3. Connect the DC Power Supply to the Power Input on the back of iW Translator.
4. Plug the DC Power Supply into a wall outlet.
5. Connect the lights to the Color Kinetics iW power/data supply.

Connecting as an Expander (Daisy-Chaining the iW Translators)

Connect iW Translator to multiple iW Scene Controllers as shown in Figure 3.

Fig. 3

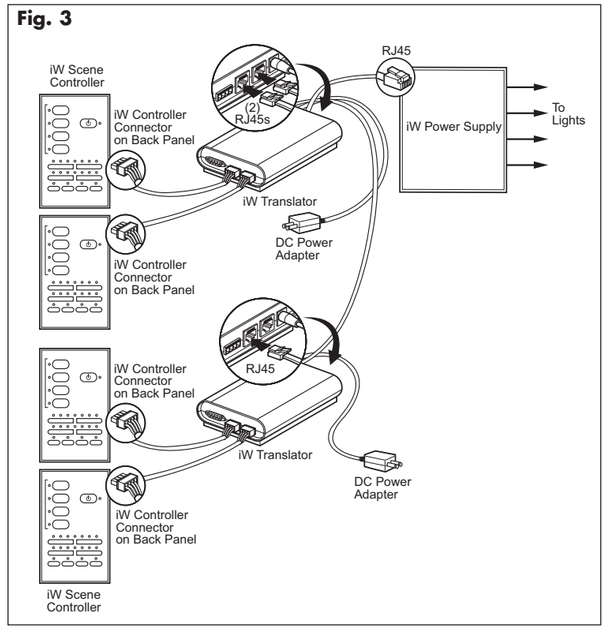

Connecting the First iW Translator

1. Connect the first two iW Scene Controllers to iW Translator by attaching the cables from the iW Controller connectors (4-pin) on the back panel of iW Scene Controllers to the iW Controller connectors (4-pin) on the front of iW Translator. Refer to the iW Scene Controller Installation Guide for more information on using iW Scene Controllers.
2. Connect the first iW Translator to the Color Kinetics iW power/data supply by attaching the cable from the RJ45 connector on the back of iW Translator to the RJ45 connector on the Color Kinetics iW power/data supply.
3. Connect the DC Power Supply to the Power Input on the back of the first iW Translator.
4. Plug the DC Power Supply into a wall outlet.
5. Connect the lights to the Color Kinetics iW power/data supply.

Connecting Additional iW Translators

1. Connect the iW Translator to be daisy-chained to the first iW Translator by attaching a cable from an RJ45 connector (Data out) on the back of iW Translator to an RJ45 connector (Data in) on the back of the next iW Translator.
2. Connect two iW Scene Controllers to the additional iW Translator by attaching the cables from the iW Data/Power Supply connectors (4-pin) on the back panel of the iW Scene Controllers to the iW Controllers connectors on the front of iW Translator (4-pin.) Refer to the iW Scene Controller Installation Guide for more information on using iW Scene Controllers.
3. Connect the DC Power Supply to the Power Input on the back of iW Translator.
4. Plug the DC Power Supply into a wall outlet.
5. Repeat as needed until all iW Translators are connected.

iW TRANSLATOR LEDs

iW Translator has two LEDs on the back panel: a Power LED and a Data LED. The Power LED (red) blinks twice a second to indicate that iW Translator is running. The Data LED (green) blinks when data is being transferred.

ONE YEAR LIMITED HARDWARE WARRANTY

Color Kinetics Incorporated warrants its products, if properly used and installed, will be free from defects in materials and workmanship and will substantially conform to Color Kinetics' publicly available specifications for a period of one (1) year after the date the product was purchased by the end user.

If the product fails during the warranty period, purchaser's remedy under this limited warranty shall be at Color Kinetics sole election:

- Repair the product by means of hardware and/or software or
- Replace the product with another product or
- If Color Kinetics is unable to repair or replace the particular product, refund the then current value of the product.

This limited warranty does not cover damages due to external causes, including, but not limited to, accident, problems with electrical power, usage not in accordance with product instructions, misuse, neglect, modification, repair, improper installation, or improper testing. Color Kinetics is not responsible for indirect, incidental, or consequential damages resulting from any breach of warranty or under any other legal theory including, but not limited to, lost profits, downtime, goodwill, damage to or replacement of equipment and property.

To obtain warranty service, you may contact your distributor in accordance with its instructions, or you may contact Color Kinetics. To request warranty service you should call Color Kinetics during the warranty period. Proof of purchase or registration is required. When calling within warranty, please provide:

1) Your name, shipping address, and telephone number
2) A description of the model and serial number
3) An explanation of the problem

A Return Authorization (RA) number & ship-to address will be provided to send the product back.

The warranty and remedies set forth above are exclusive and in lieu of all others, whether oral or written, express or implied. Color Kinetics specifically disclaims any and all implied warranties, including, without limitation, warranties of merchantability and fitness for a particular purpose. No Color Kinetics distributor, dealer, agent or employee is authorized to make any modification, extension, or addition to this warranty. This warranty gives you specific legal rights, and you may also have other rights that vary from jurisdiction to jurisdiction.