COLOR KINETICS

PHILIPS

eW COVE

An EssentialWhite™ Product

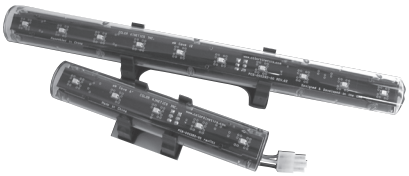

eW™ Cove is a linear fixture that generates high quality white light for small cove and display lighting applications. Its low profile makes it a perfect choice for a wide variety of installations in retail, exhibit, hospitality, and architectural settings. eW Cove is available in two lengths, 6" (15.2cm) and 12" (30.5 cm), and three fixed color temperatures: 2700K, 3000K, and 4200K.

Encased in a vented, molded plastic housing, the eW Cove fixture has a 120° x 120° beam angle and features in-line power/data connectors that allow a run to turn up to 180°, reducing installation time. The mounting bracket provides 180° aiming rotation.

Power can be supplied by any 24VDC Class 2 UL 1310 Listed power supply, including the PS-96 24V from Color Kinetics.

The eW Cove Leader Cable (ITEM# 107-000007-00) provides simple on/off functionality. If dimming control is desired (using a 0-10V dimmer), the eW Cove Dimming Adapter Kit (ITEM# 107-000007-01) is required.

eW COVE SPECIFICATIONS

COLOR TEMPERATURES	2700K, 3000K, or 4200K
SOURCE	High intensity LEDs
BEAM ANGLE	120° x 120°
HOUSING	Rigid, vented plastic housing. 12″ L x 1.5″ W x 1.4″ H (30.5 cm) x (6.8 cm) x (3.5 cm) (with base) 6″ L x 1.5″ W x 1.4″ H (15.2 cm) x (6.8 cm) x (3.5 cm) (with base)
CONNECTORS	Integral 3-pin male/female connectors
LISTINGS	UL/cUL, CE

COMMUNICATION SPECIFICATIONS

DATA INTERFACE	Color Kinetics Chromasic data interface system

ELECTRICAL SPECIFICATIONS

POWER REQUIREMENT	24VDC
POWER CONSUMPTION	2.5W at full output for 12" fixture; 1.3W at full output for 6" fixture
POWER SUPPLY	PS-96 24V (ITEM# 109-000025-00) or any other 24VDC Class 2 UL 1310 Listed power supply
LEADER CABLE	30-ft (9m) eW Cove Leader Cable (Item# 107-000007-00), or Dimming Adapter Kit (includes 0-10V Dimming Adapter and Dimming Leader Cable) (ITEM# 107-000007-01)
JUMPER CABLE	1-ft (0.3m) Jumper Cable for iColor Cove EC, iColor Cove QL, and eW Cove (ITEM# 108-000020-00) 5-ft (1.5m) Jumper Cable for iColor Cove EC, iColor Cove QL, and eW Cove (ITEM# 108-000020-01)

ENVIRONMENTAL SPECIFICATIONS

TEMPERATURE RANGE	-4˚F to 122˚F (-20˚C to 50˚C) based on testing of specific product

LED SOURCE LIFE

In traditional lamp sources, lifetime is defined as the point at which 50% of the lamps fail. This is also termed Mean Time Between Failure [MTBF]. LEDs are semiconductor devices and have a much longer MTBF than conventional sources. However, MTBF is not the only consideration in determining useful life. Color Kinetics uses the concept of useful light output for rating source lifetimes. Like traditional sources, LED output degrades over time (lumen depreciation) and this is the metric for SSL lifetime.

LED lumen depreciation is affected by numerous environmental conditions such as ambient temperature, humidity and ventilation. Lumen depreciation is also affected by means of control, thermal management, current levels, and a host of other electrical design considerations. Color Kinetics systems are expertly engineered to optimize LED life when used under normal operating conditions. Lumen depreciation information is based on LED manufacturers' source life data as well as other third party testing. Low temperatures and controlled effects have a beneficial effect on lumen depreciation. Overall system lifetime could vary substantially based on usage and the environment in which the system is installed.

Temperature and effects will affect lifetime. Color Kinetics rates product lifetime using lumen depreciation to 70% of original light output. When the fixture is running on warm or cool, at room temperature, the LED lifetime is in the range 50,000 – 70,000 hours. This is based on LED manufacturers' test data. High output is defined as any LED device that is ½ watt or above. For more detailed information on source life, please see www.colorkinetics.com/lifetime.

CHROMASIC® BY COLOR KINETICS

OPTIBIN® BY COLOR KINETICS

DRY

CE c UL US LISTED 78GF

ITEM# 500-000005-00 (2700K, 6")
500-000005-01 (3000K, 6")
500-000005-02 (4200K, 6")
500-000004-00 (2700K, 12")
500-000004-01 (3000K, 12")
500-000004-02 (4200K, 12")

This product is protected by one or more of the following patents: U.S. Patent Nos. 6,016,038, 6,150,774 and other patents listed at http://colorkinetics.com/patents/. Other patents pending.

BRO193 Rev 04

Specifications subject to change without notice. Refer to www.colorkinetics.com for the most recent version.

PHILIPS SOLID-STATE LIGHTING SOLUTIONS • 3 BURLINGTON WOODS DRIVE • BURLINGTON, MA 01803 • USA
TEL 888 FULL RGB • TEL 617 423 9999 • FAX 617 423 9998 • INFO@COLORKINETICS.COM • WWW.COLORKINETICS.COM

eW COVE 2700K, 3000K, AND 4200K

PHOTOMETRIC PERFORMANCE

Photometric data is based on test results from an independent testing lab.

SOURCE SPECIFICATIONS

Lens:	Tempered clear glass lens
Source:	10 LEDs
Beam Angle:	120° x 120°
Distribution:	Symmetric direct illumination
CCT:	2700K, 3000K, 4200K
CRI:	66 (2700K), 69 (3000K), 73 (4200K)

ILLUMINANCE DISTRIBUTION PARAMETERS

Units: Footcandles (top)/Lux (bottom)
10.8 lux = 1 fc
Location: 1.5′/0.3m perpendicular from surface
Measured on: All, Reflectance model 50%

CANDLE POWER DISTRIBUTION

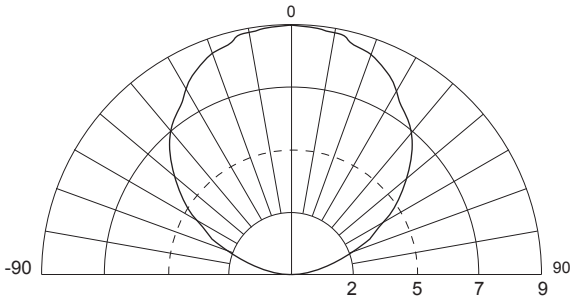

Measured on: All
Beam center: 9.2 cd (2700K), 9.4 cd (3000K), 13.5cd (4200K)
Dashed lined: Indicates 50% of peak

ILLUMINANCE

CCT	0.5′ / 0.15m	1′ / 0.3m	2′ / 0.6m	3′ / 1m
2700K	589.0 / 6340.0	23.6 / 254.0	3.5 / 37.7	1.3 / 14.0
3000K	603.0 / 6490.7	24.1 / 259.4	3.6 / 38.8	1.4 / 15.1
4200K	862.0 / 9278.6	34.5 / 371.4	5.1 / 54.9	2.0 / 21.5

Measured in Footcandles (top)/Lux (bottom) on axis
Measured on: Reflectance 0

LIGHT OUTPUT

	TOTAL OUTPUT (lumens)	POWER (Watts)	EFFICACY (lm/W)
2700K	24	2.3	17.8
3000K	24	2.3	16.5
4200K	36	2.3	21.3

Note: Efficacy figures are for a complete tested fixture not simply a lamp source.

ILLUMINANCE DISTRIBUTION 2700K

0.0 / 0.0	0.1 / 1.1	0.1 / 1.1	0.1 / 1.1	0.1 / 1.1	0.0 / 0.0	3′/1m
0.1 / 1.1	0.8 / 8.6	1.5 / 16.1	0.9 / 9.7	0.2 / 2.2	0.1 / 1.1	
0.1 / 1.1	1.5 / 16.1	3.3 / 35.5	2.7 / 29.1	0.9 / 9.7	0.1 / 1.1	0′/0m
0.1 / 1.1	0.9 / 9.7	2.7 / 29.1	3.3 / 35.5	1.5 / 16.1	0.1 / 1.1	
0.1 / 1.1	0.2 / 2.2	0.9 / 9.7	1.5 / 16.1	0.8 / 8.6	0.1 / 1.1	
0.0 / 0.0	0.1 / 1.1	0.1 / 1.1	0.1 / 1.1	0.1 / 1.1	0.0 / 0.0	3′/1′m

3′/1m 0′/0m 3′/1mm

ILLUMINANCE DISTRIBUTION 3000K

0.0 / 0.0	0.1 / 1.1	0.1 / 1.1	0.1 / 1.1	0.1 / 1.1	0.0 / 0.0	13′/1m
0.1 / 1.1	0.8 / 8,6	1.4 / 15.1	0.9 / 9.7	0.2 / 2.2	0.1 / 1.1	
0.1 / 1.1	1.4 / 15.1	3.3 / 35.5	2.7 / 29.1	0.9 / 9.7	0.1 / 1.1	0′/0m
0.1 / 1.1	0.9 / 9.7	2.7 / 29.1	3.3 / 35.5	1.4 / 15.1	0.1 / 1.1	
0.1 / 1.1	0.2 / 2.2	0.9 / 9.7	1.4 / 15.1	0.8 / 8.6	0.1 / 1.1	
0.0 / 0.0	0.1 / 1.1	0.1 / 1.1	0.1 / 1.11.1	0.1 / 5.4	0.0 / 0.0	3′/1m

3′/1m 0′/0m 3′/1m

ILLUMINANCE DISTRIBUTION 4200K

0.1 / 1.1	0.1 / 1.1	0.2 / 2.2	0.2 / 2.2	0.1 / 1.1	0.1 / 1.1	3′/1m
0.1 / 1.1	1.2 / 12.9	2.1 / 22.6	1.3 / 14.0	0.2 / 2.2	0.1 / 1.1	
0.2 / 2.2	2.1 / 22.6	4.8 / 51.7	4.0 / 43.1	1.3 / 14.0	0.2 / 2.2	0′/0m
0.2 / 2.2	1.3 / 14.0	4.0 / 43.1	4.8 / 51.7	2.1 / 22.6	0.2 / 2.2	
0.1 / 1.1	0.2 / 2.2	1.3 / 14.0	2.1 / 22.6	1.2 / 12.9	0.1 / 1.1	
0.1 / 1.1	0.1 / 1.1	0.2 / 2.2	0.2 / 2.2	0.1 / 1.1	0.1 / 1.1	3′/1m

3′/1m 0′/0m 3′/1m

Units: Footcandles (top)/Lux (bottom); 10.8 lux = 1 fc
Location: 1' (0.3 m) perpendicular from surface
Measured on: Reflectance model 50%

PHILIPS SOLID-STATE LIGHTING SOLUTIONS • 3 BURLINGTON WOODS DRIVE • BURLINGTON, MA 01803 • USA
TEL 888 FULL RGB • TEL 617 423 9999 • FAX 617 423 9998 • INFO@COLORKINETICS.COM • WWW.COLORKINETICS.COM

PHYSICAL DIMENSIONS

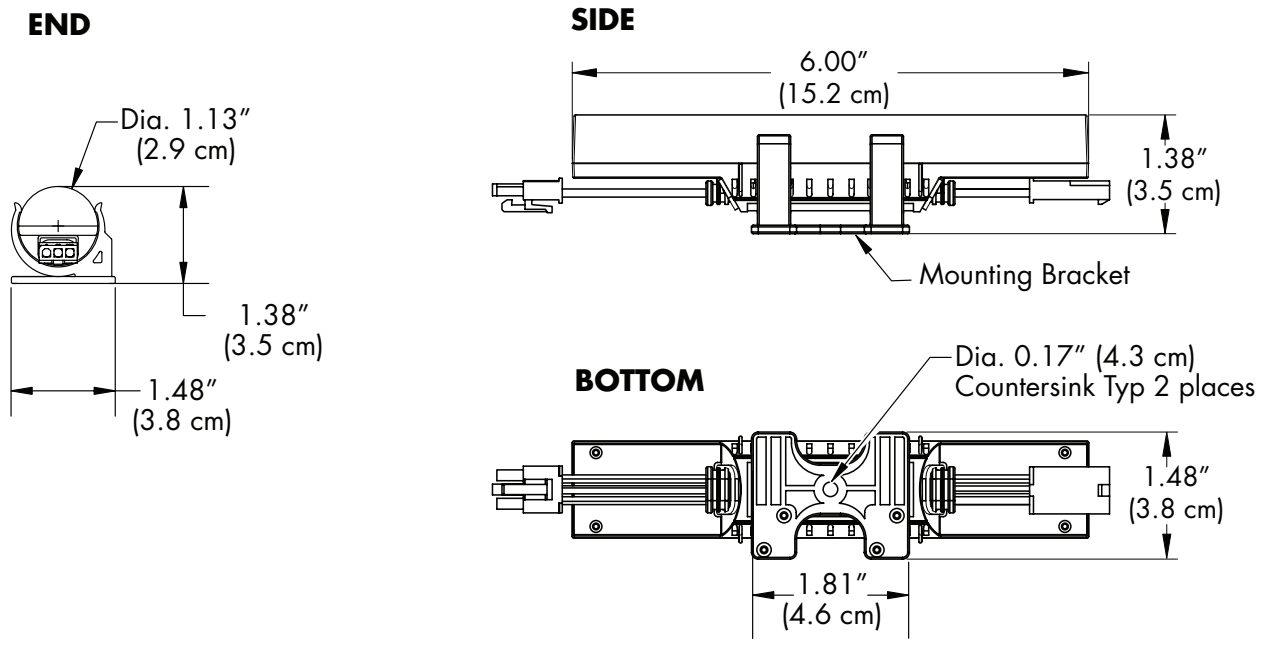

eW Cove 6" SPECIFICATIONS	
DATA/POWER CONNECTOR	Integral 3-pin male/female connectors
POWER/DATA SUPPLY	PS-96 24V or other 24VDC Class 2 UL 1310 Listed power supply

END

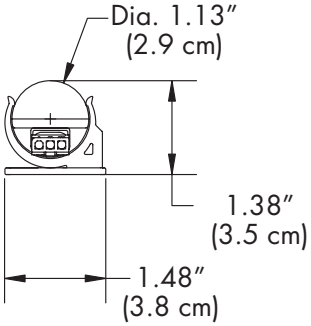

SIDE

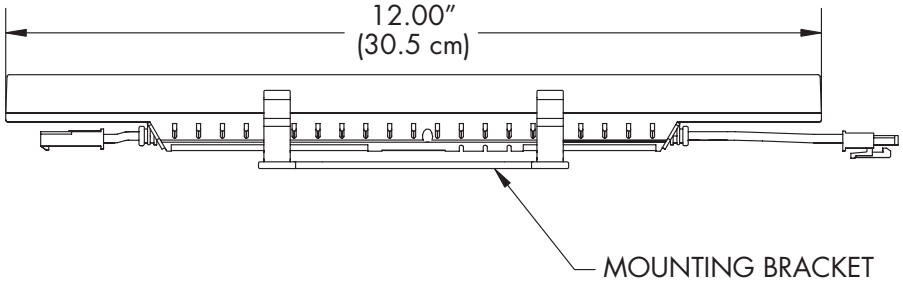

BOTTOM

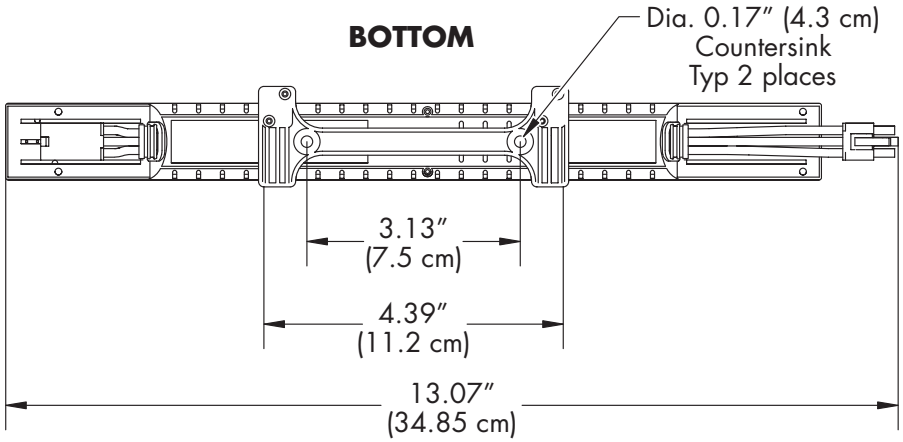

eW Cove 12" SPECIFICATIONS	
DATA/POWER CONNECTOR	Integral 3-pin male/female connectors
POWER/DATA SUPPLY	PS-96 24V or other 24VDC Class 2 UL 1310 Listed power supply

Maximum: 36 eW Cove 12″ fixtures or 65 eW Cove 6″ fixture per run depending on the power supply used.

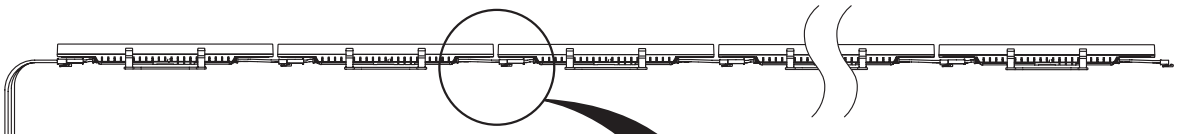

Use with eW Cove Leader Cable: 30-feet (9 m)
Color Kinetics Item# 107-000007-00

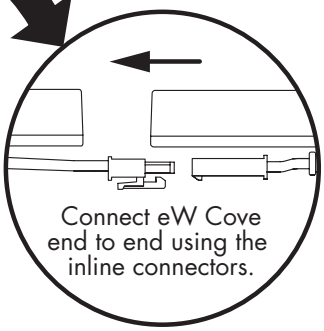

Color Kinetics Recommended 24VDC Class 2 UL 1310 Listed Power Supply (ITEM# 109-000025-00) (100W maximum)

Note: The eW Cove Leader cable is connectorized to ensure faultless wiring.
Do not modify, shorten, or lengthen the cable.
Do not remove or replace the factory installed connectors.

For complete installation instructions and safety precautions, refer to the eW Cove User Guide and wiring diagrams located at www.colorkinetics.com/support.

Additional Items	
Power/Data Supply	PS-96 24V or other 24VDC Class 2 UL 1310 Listed power supply
Cables	- 30-ft (9m) eW Cove Leader Cable (Item# 107-000007-00), or - Dimming Adapter Kit (includes 0-10V Dimming Adapter and Dimming Leader Cable) (ITEM# 107-000007-01) - 1-ft (0.3m) Jumper Cable for iColor Cove EC, iColor Cove QL, and eW Cove (Item# 108-000020-00) - 5-ft (1.5m) Jumper Cable for iColor Cove EC, iColor Cove QL, and eW Cove (ITEM# 108-000020-01)

OPTIBIN®
There are inherent variations in the fabrication processes of all semiconductor materials. For LEDs, this variance results in differences in the color and intensity of light output as well as electrical characteristics. Due to these differences, LED manufacturers sort production into "bins," but insuring the availability of a single bin is very difficult. To minimize this issue and achieve optimal color consistency in its products, Color Kinetics has developed and uses a proprietary technology called Optibin. Optibin is an advanced production binning optimization process that minimizes the effects of LED variance for the best possible output uniformity in the final product. Color Kinetics Optibin technology gives the most consistent control of color and intensity from product to product.

PHILIPS SOLID-STATE LIGHTING SOLUTIONS • 3 BURLINGTON WOODS DRIVE • BURLINGTON, MA 01803 • USA
TEL 888 FULL RGB • TEL 617 423 9999 • FAX 617 423 9998 • INFO@COLORKINETICS.COM • WWW.COLORKINETICS.COM