COLOR KINETICS

PHILIPS

DLE C-101

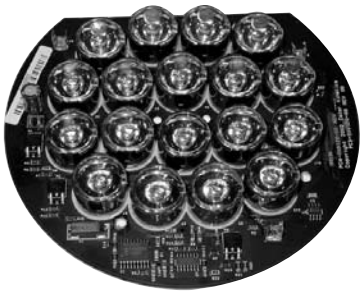

Color Kinetics® DLE C-101 digital light engine is a complete, networkable illumination module intended for integration into a wide variety of OEM lighting products and custom installations. On-board intelligence drives the light emitting diodes (LEDs), stores configuration data, and monitors the temperature of the light engine. With simple control and power input, DLE C-101 delivers a broad range of color control. Separate red, green, and blue (RGB) control channels enable smooth color mixing across a generous gamut. Metal-core printed circuit board (PCB) construction ensures highly efficient heat dissipation and thermal performance.

DLE C-101 accepts commands using the DMX512 packet format. Three sequential channels are used: one for red, one for green, and one for blue. These three 8-bit channels provide full 24-bit control of the emitted color. Thus, DLE C-101 can be instructed to produce over 16 million different colors. Color changes are virtually instantaneous.

DLE C-101 uses high power LEDs driven by precision current sources that are tolerant of wide variations in temperature and supply voltage, and whose intensity is controlled by an advanced pulse width modulation (PWM) algorithm. DLE C-101 uses 14-bit PWM natively. The 16,384 intensities available on each channel are non-linearly mapped to incoming 8-bit DMX data to better match the human eye's perception of brightness.

DLE C-101's on-board processor has non-volatile memory that stores configuration and performance data. Each DLE module is uniquely and permanently serialized at the time of manufacture, and this serial number can be used to identify the module in an installation or network, even if that installation contains other Color Kinetics lights or fixtures from other OEMs that use Color Kinetics DLEs.

DLE C-101 SPECIFICATIONS

COLOR RANGE	16.7 million (24-bit) additive red, green, and blue colors; continuously variable intensity output range
SOURCE	High brightness, power package, colored light emitting diodes (LEDs)
WEIGHT	4 oz. (0.11 kg)

COMMUNICATION SPECIFICATIONS

DATA INTERFACE	CKDMX
CONTROL	Color Kinetics full line of controllers or DMX512 (RS485) when using Color Kinetics power/data supply

ELECTRICAL SPECIFICATIONS

POWER REQUIREMENT	24VDC Regulated, +/- 0.5V
POWER CONSUMPTION	25W Max. at full intensity (full RGB), 50 mA (min.)/1.10 A (max.)

ENVIRONMENTAL SPECIFICATIONS

MAXIMUM TEMPERATURE	Housing dependent. Design should provide adequate heat transfer such that no individual component exceeds maximum levels specified in the Thermal Management Section of the Digital Light Engine Integration Guide. Over temperature protection circuit operates when component temperature exceeds acceptable limits.
MINIMUM TEMPERATURE	-20°C
ENVIRONMENT	Non-corrosive
HUMIDITY	0-95% non-condensing

LED SOURCE LIFE

In traditional lamp sources, lifetime is defined as the point at which 50% of the lamps fail. This is also termed Mean Time Between Failure [MTBF]. LEDs are semiconductor devices and have a much longer MTBF than conventional sources. However, MTBF is not the only consideration in determining useful life. Color Kinetics uses the concept of useful light output for rating source lifetimes. Like traditional sources, LED output degrades over time (lumen depreciation) and this is the metric for SSL lifetime.

LED lumen depreciation is affected by numerous environmental conditions such as ambient temperature, humidity, and ventilation. Lumen depreciation is also affected by means of control, thermal management, current levels, and a host of other electrical design considerations. Color Kinetics systems are expertly engineered to optimize LED life when used under normal operating conditions. Lumen depreciation information is based on LED manufacturers' source life data as well as other third party testing. Low temperatures and controlled effects have a beneficial effect on lumen depreciation. Overall system lifetime could vary substantially based on usage and the environment in which the system is installed.

Temperature and effects will affect lifetime. Color Kinetics rates product lifetime using lumen depreciation to 50% of original light output. When the fixture is running at room temperature using a color wash effect, the range of lifetime is in the range of 80,000-100,000 hours. This is LED manufacturers' test data. High output is defined as any LED device that is 1/2 watt or above. For more detailed information on source life, please see www.colorkinetics.com/lifetime.

CHROMACORE® BY COLOR KINETICS

OPTIBIN® BY COLOR KINETICS

DLE C-101 (Al Core) ITEM# 118-000078-00
DLE C-101 (Unserialized) ITEM# 118-000078-01

This product is protected by one or more of the following patents: U.S. Patent Nos. 6,016,038, 6,150,774 and other patents listed at http://colorkinetics.com/patents/. Other patents pending.

BR0117 Rev 04

Specifications subject to change without notice. Refer to www.colorkinetics.com for the most recent data sheet versions.

PHILIPS SOLID-STATE LIGHTING SOLUTIONS • 3 BURLINGTON WOODS DRIVE • BURLINGTON, MA 01803 • USA
TEL 888 FULL RGB • TEL 617 423 9999 • FAX 617 423 9998 • INFO@COLORKINETICS.COM • WWW.COLORKINETICS.COM

DLE C-101

PHOTOMETRIC PERFORMANCE

The photometric data below is based on the following constraints: DLE C-101 mounted into a 6-inch, round fixture with no glass cover. Refer to the *ColorBurst 6 clear lens.IES* file located on www.colorkinetics.com/support for more information.

Photometric data is based on test results from an independent testing lab.

SOURCE SPECIFICATIONS

Optics:	No glass
Source:	18 power package LEDs (6 Red, 6 Green, 6 Blue)
Beam Angle:	10° (at 50% of peak candela)
Distribution:	Symmetric direct illumination
CCT:	Adjustable 1,000 – 10,000K
CRI:	Not measurable (CIE 13.3-1995)

ILLUMINANCE DISTRIBUTION

0.5 / 5.4	0.9 / 9.7	1.2 / 12.9	0.9 / 9.7	0.5 / 5.4	0.4 / 4.3	6.0′/2.0m
0.8 / 8.6	9.9 / 106.6	18.8 / 202.4	10.6 / 114.1	1.3 / 14.0	0.5 / 5.4	5.0′/1.5m
1.1 / 11.8	18.6 / 200.2	44.1 / 474.7	36.3 / 390.7	10.5 / 113.0	0.8 / 8.6	4.0′/1.2m
0.7 / 7.5	10.4 / 111.9	36.1 / 388.6	44.1 / 474.7	18.7 / 201.3	1.1 / 11.8	3.0′/1.0m
0.4 / 4.3	1.2 / 12.9	10.4 / 111.9	18.7 / 201.3	9.9 / 106.6	0.7 / 7.5	2.0′/0.6m
0.3 / 3.2	0.4 / 4.3	0.8 / 8.6	1.1 / 11.8	0.8 / 8.6	0.3 / 3.2	1.0′/0.3m
3.0′/1.0m		0′/0m			3.0′/1.0m	

Units:	Footcandles (top)/Lux (bottom) 10.8 lux = 1 fc
Measured on:	All, reflectance model 80/50/20%
Location:	Center of grid, 3'/1m from and perpendicular to surface

CANDLE POWER DISTRIBUTION

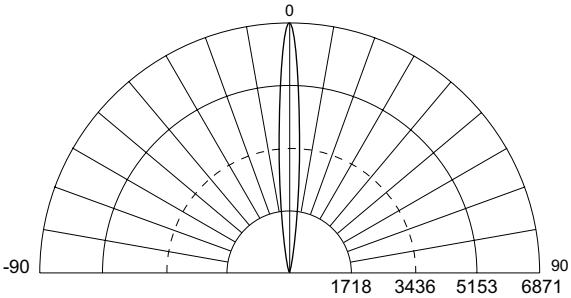

Measured on:	White (Full Red, Green, and Blue)
Beam center:	6871 cd
Thin dashed lined:	Indicates 50% of peak
Multipliers:	0.32 Red, 0.51 Green, 0.17 Blue

ILLUMINANCE

COLOR	3′ / 1m	6′ / 2m	9′ / 3m	15′ / 5m
WHITE	766.0 / 8245.2	191.0 / 2055.9	84.9 / 913.9	30.6 / 329.4
RED	242.6 / 2611.3	60.5 / 651.1	26.9 / 289.4	9.7 / 104.3
GREEN	390.9 / 4207.5	97.5 / 1049.1	43.3 / 466.3	15.6 / 168.1
BLUE	133.2 / 1433.8	33.2 / 357.5	14.8 / 158.9	5.3 / 57.3

Units: Footcandles (top)/Lux (bottom) on axis.
Measured on: All, reflectance 0.

LIGHT OUTPUT

COLOR	TOTAL OUTPUT (lumens)	POWER (Watts)	EFFICACY (Lm/W)
WHITE	299	25.4	11.8
RED	94.7	9.6	9.9
GREEN	152.6	9.6	15.9
BLUE	52.0	9.6	5.4

OPTIBIN®

There are inherent variations in the fabrication processes of all semiconductor materials. For LEDs, this variance results in differences in the color and intensity of light output as well as electrical characteristics. Due to these differences, LED manufacturers sort production into "bins," but insuring the availability of a single bin is very difficult. To minimize this issue and achieve optimal color consistency in its products, Color Kinetics has developed and uses a proprietary technology called Optibin. Optibin is an advanced production binning optimization process that minimizes the effects of LED variance for the best possible output uniformity in the final product. Color Kinetics Optibin technology gives the most consistent control of color and intensity from product to product.

PHILIPS SOLID-STATE LIGHTING SOLUTIONS • 3 BURLINGTON WOODS DRIVE • BURLINGTON, MA 01803 • USA
TEL 888 FULL RGB • TEL 617 423 9999 • FAX 617 423 9998 • INFO@COLORKINETICS.COM • WWW.COLORKINETICS.COM

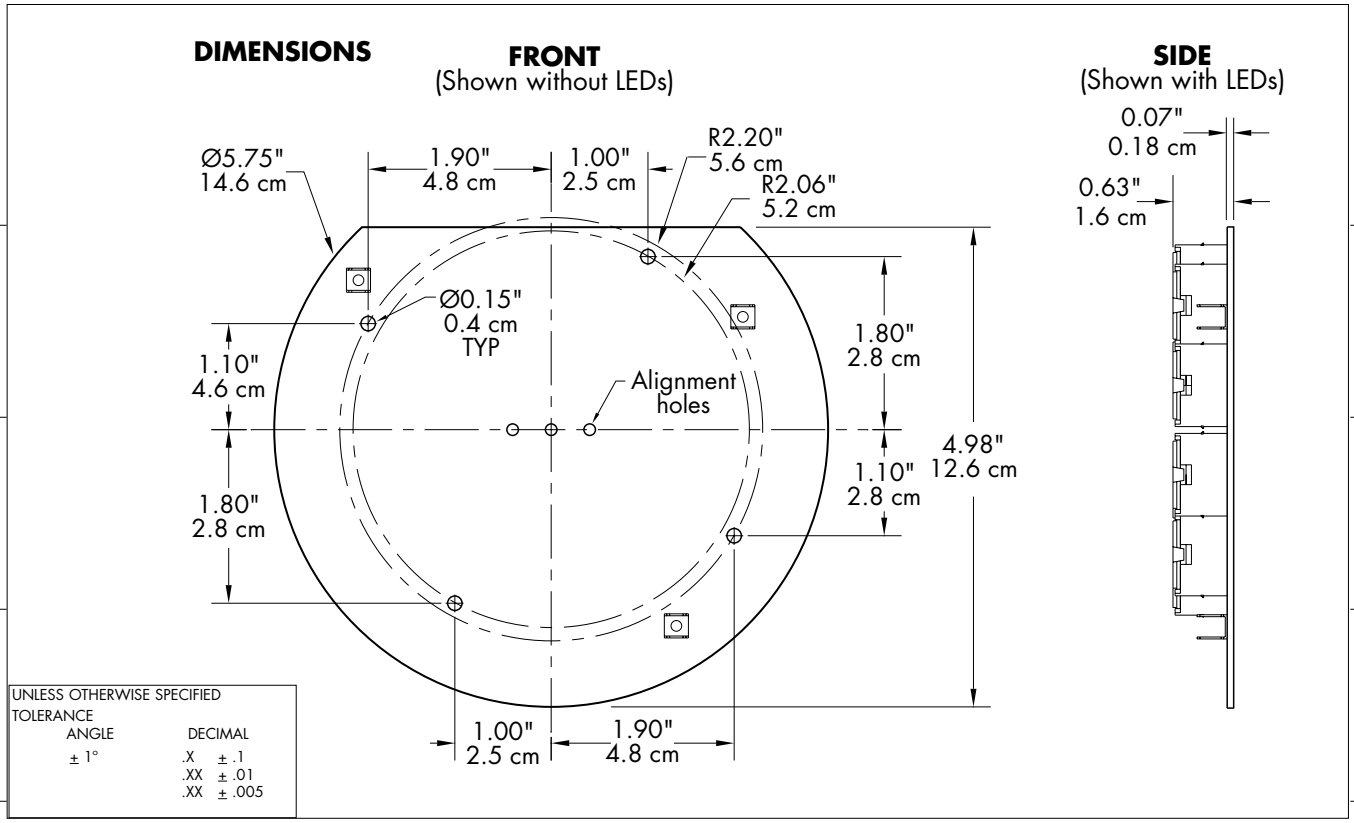

THERMAL MEASUREMENT TEST POINTS

FRONT

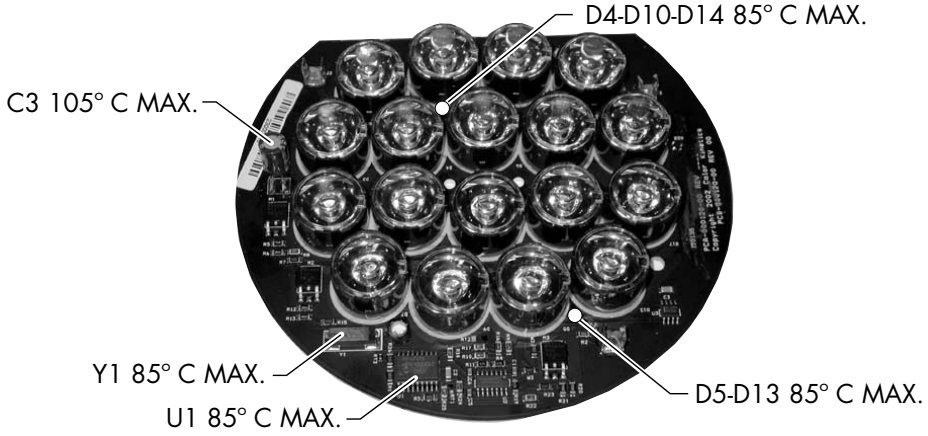

Thermal Measurement

DLE C-101 generates a maximum amount of heat when set to white (full red, green, and blue). Set the board to full white and allow everything to warm up and stabilize before testing. Thermal tests must be performed at the system's highest rated operating temperature. For elevated ambient temperatures, test the system in an environmental chamber or similar test apparatus that can maintain the desired ambient temperature for the duration of the test.

Using a thermocouple, measure the DLE C-101 at the locations indicated above and ensure they are below the maximum temperature.

Note: Refer to DLE Integration Guide for complete integration instructions and warnings.

Typical Installation Using Color Kinetics PDM-101 Power/Data Module

Single DLE: 25W Max Power Output

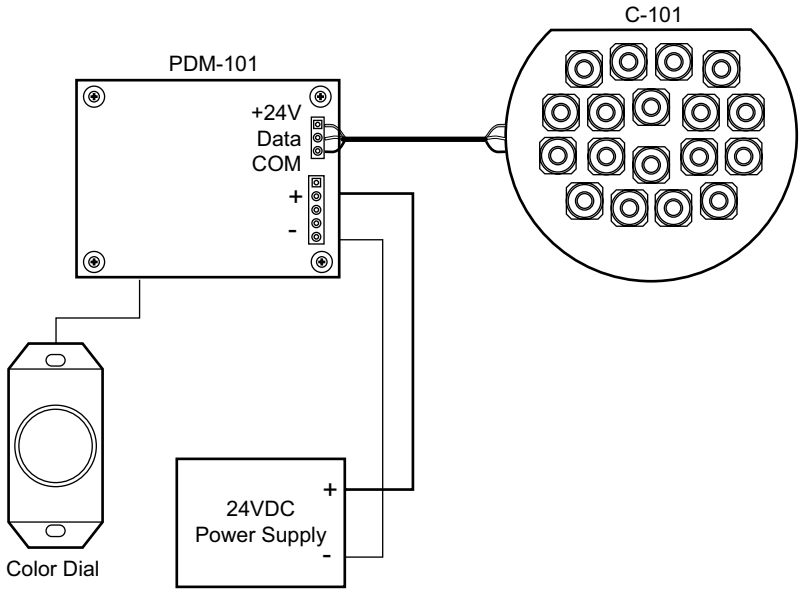

Typical installation using Color Kinetics PDM-101 Power/Data Module

Multiple DLEs:

175ft max length from PDM to last DLE

1.5V max drop at last DLE under full load