eW Blast Powercore gen4

Date: _____
Type: _____
Firm Name: _____
Project: _____

2700 K, 100 – 277 VAC, 80° spread lens, Gray housing, BIS

Exterior customizable luminaire with single temperature white light

eW Blast Powercore gen4 high-performance LED luminaires provide a high-intensity wash of white light with simplified installation. eW Blast Powercore gen4 offers a range of accessories that allow for customizable beam angles for floodlighting, spotlighting, wall washing, and grazing, along with the efficiency and cost-effectiveness of Powercore technology in a rugged die-cast aluminium housing.

- Expands customization with a wide range of new accessory options. In addition to the native 6° lens, five different spread lenses can customize the luminaire to produce 20°, 40°, 60°, 80°, and 10° x 40° (asymmetric) beam angles. Three housing color choices (black, gray, and white)—plus the option to add or combine a louver, rock guard, full glare shield, and half glare shield—create new aesthetic possibilities for designers and architects.
- Meets ASTM B117 standard for > 1,500 hours of corrosion resistance and ANSI C136.31-2010 standard with a 3G vibration rating.
- Improves durability with new flat lens that prevents water from pooling into the luminaire, keeping the LEDs protected and secure over the course of a luminaire's lifetime.
- Integrates patented Powercore technology that controls power output to luminaires directly from line voltage – rapidly, efficiently, and accurately. The Color Kinetics Data Enabler Pro merges line voltage with control data and delivers them to luminaires over a single standard cable, dramatically simplifying installation and lowering total system cost.
- The Color Kinetics Data Enabler Pro merges line voltage with control data and delivers them to luminaires over a single standard cable, dramatically simplifying installation and lowering total system cost.
- Universal power input range of 100 to 277 VAC.
- Precision Dimming—Smooth dimming down to 1% with optional Data Enabler Pro and digital control interface.
- Works seamlessly with the complete Color Kinetics line of controllers, including ColorDial Pro, iPlayer 3, and Light System Manager – as well as third-party controllers.

For detailed product information, please refer to the Blast gen4 Product Guide at www.colorkinetics.com/global/products/essentialwhite/ew-blast-powercore-gen4/

COLORKINETICS

Specifications

Due to continuous improvements and innovations, specifications may change without notice.

Output

Color Temperature*	2700 K
Beam Angle	80°

Electrical

Input Voltage	100 to 277 VAC, auto-ranging, 50/60 Hz
Power Consumption (Maximum at full output, steady state)	50 W
Power Factor	0.9 @ 120 VAC, 0.85 @ 277 VAC
Surge Limits¶	2 kV maximum differential (L to N) 4 kV maximum common (L to Gnd or N to Gnd)

For additional Surge Protection Requirements for LED Lighting Systems, please refer to www.colorkinetics.com/KB/surge-protection.

Control

Dimmer

ON/OFF; precision dimming by 4 conductor cable & Data Enabler Pro

Remote Monitoring & Management	Philips ActiveSite Ready, works with Interact Landmark

Lumen Maintenance

Threshold§	Ambient Temperature	Reported¶¶	Calculated¶¶
L_{90}	25 °C	28,000	28,000
	50 °C	27,000	27,000
L_{70}	25 °C	51,000	84,000
	50 °C	51,000	83,000
L_{50}	25 °C	51,000	> 100,000
	50 °C	51,000	> 100,000

Physical

Dimensions (Height x Width x Depth)	183.7 x 337.8 x 171.2 mm (7.2 x 13.2 x 6.74 in)
Weight	3.9 kg (8.2 lb)
Effective Projected Area (EPA)	0.068 m² (0.73 ft²) (Luminaire plus Full Glare Shield)
Housing Material	Die-cast aluminium, silver gray powder-coated finish
Lens	Clear tempered glass
Luminaire Connections	1.8 m (6 ft) unified power/data cable

Temperature Ranges

-40 to 50 °C (-40 to 122 °F) Operating
-20 to 50 °C (-4 to 122 °F) Startup
-40 to 80 °C (-40 to 176 °F) Storage

Vibration Resistance

Complies with ANSI C136.31, 3G

Mechanical Impact	IK10

Corrosion Resistance

Complies with ASTM B117 standard for > 1,500 hours

Humidity	0 to 95%, non-condensing

Luminaire Run Lengths

To calculate luminaire run lengths and total power consumption for your specific installation, download the Configuration Calculator from www.colorkinetics.com/support/install_tool/

Certification and Safety

Approbation	BIS
Environment	Dry/Damp/Wet Location, IP66

* Correlated color temperature (CCT) complies with ANSI C78.377-2008 for the chromaticity of solid state lighting products.

‡ L90 = 90% lumen maintenance (when light output drops below 90% of initial output). L70 = 70% lumen maintenance (when light output drops below 70% of initial output). L50 = 50% lumen maintenance (when light output drops below 50% of initial output). Ambient luminaire temperatures specified. Lumen maintenance calculations are based on lifetime prediction graphs supplied by LED source manufacturers. Calculations for white-light LED fixtures are based on measurements that comply with IES LM-80-08 testing procedures. Refer to www.colorkinetics.com/support/appnotes/ for more information.

§ Lxx = xx% lumen maintenance (when light output drops below xx% of initial output). All values are given at B10, or the median value where 90% of the LED population is better than the reported or calculated lumen maintenance measurement.

¶ Minimum surge limits per IEC 61547, tested in accordance with IEC 61000-4-5.

¶¶Lumen maintenance figures are based on lifetime prediction graphs supplied by LED source manufacturers. Whenever possible, figures use measurements that comply with IES LM-80-08 testing procedures. In accordance with TM-21-11, Reported values represent the interpolated value based on six times the LM-80-08 total test duration (in hours). Calculated values represent time durations that exceed six times the total test duration.

Dimensions

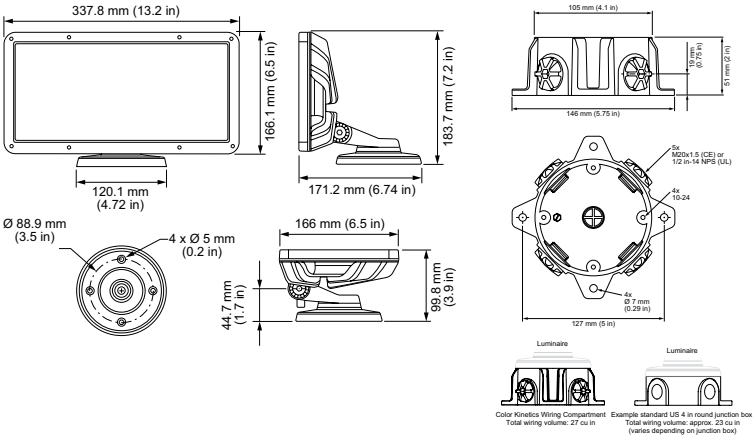

For help estimating the light output and distribution of eW Blast gen4 luminaires, please contact Color Kinetics Applications Engineering Services at http://www.lighting.philips.com/support/connect/contact-us.

Luminaire and Accessories

Use Item Number when ordering in North America

Luminaire	Item Number	Item 12NC
eW Blast Powercore gen4, 2700 K, 100 – 277 VAC, Gray housing	523-000100-38	912400137307
Luminaire only. Values in this specification sheet represent both the luminaire and spread lens combined. Spread lens available below in Associated Part.		
Associated Parts		
80° Spread lens	120-000185-11	912400130347
Trim Ring required for mounting. Must be ordered separately.		
Accessories		
Trim Ring, Gray	120-000185-15	912400133530
Louver, Gray	120-000185-17	912400133532
Rock Guard, Gray	120-000185-18	912400133533
Half Glare Shield, Gray	120-000185-19	912400133534
Full Glare Shield, Gray	120-000185-16	912400133531
Wiring compartment UL/cUL, Gray	106-000011-32	910503704149
Wiring Compartment CE, Gray	106-000011-42	910503703277
Power Supplies		
Data Enabler Pro (required to digitally dim unit), 3/4 in / 1/2 in NPT (U.S. trade size conduit)	106-000004-00	910503701210
Data Enabler Pro (required to digitally dim unit), PG21/PG13 (metric size conduit)	106-000004-01	910503701211

COLORKINETICS

© 2021 Signify Holding. All rights reserved. Specifications are subject to change without notice. No representation or warranty as to the accuracy or completeness of the information included herein is given and any liability for any action in reliance thereon is disclaimed.